US005307279A

United States Patent [19]

Christian et al.

[11] Patent Number: 5,307,279

[45] Date of Patent: Apr. 26, 1994

[54] SELF DIAGNOSTIC WHEEL BALANCER

[75] Inventors: Donald J. Christian, Fremont, Calif.; Steven W. Rogers, Maumelle, Ark.

[73] Assignee: FMC Corporation, Chicago, Ill.

[21] Appl. No.: 763,042

[22] Filed: Sep. 20, 1991

[51] Int. Cl.[5] G01M 17/02

[52] U.S. Cl. 364/463; 364/506; 364/551.01; 73/462

[58] Field of Search 364/463, 506, 508, 575, 364/551.01; 73/460, 462

[56] References Cited

U.S. PATENT DOCUMENTS

4,144,578	3/1979	Mueller et al.	364/575
4,201,091	5/1980	Guyot et al.	73/462
4,338,818	7/1982	Hill et al.	73/462
4,450,529	5/1984	Hill et al.	364/508
4,805,125	2/1989	Beebe	73/462

Primary Examiner—Thomas G. Black
Assistant Examiner—Michael Zawelli
Attorney, Agent, or Firm—Michael Lee; R. C. Kamp; R. B. Megley

[57] ABSTRACT

The invention provides a wheel balancer that is able to determine if its measurements are accurate. The invention takes a set of measurements and determines if the measurements are sufficiently consistent. If they are sufficiently close the invention uses the measurements to calculate wheel imbalance. If the measurements are not sufficiently close the invention uses the measurements to calculate wheel imbalance. If the measurements are not sufficiently close the invention rejects at least one data point and collects more measurements until either the invention yields sufficiently close data points or the machine is stopped. A display is provided for diagnostic messages.

18 Claims, 8 Drawing Sheets

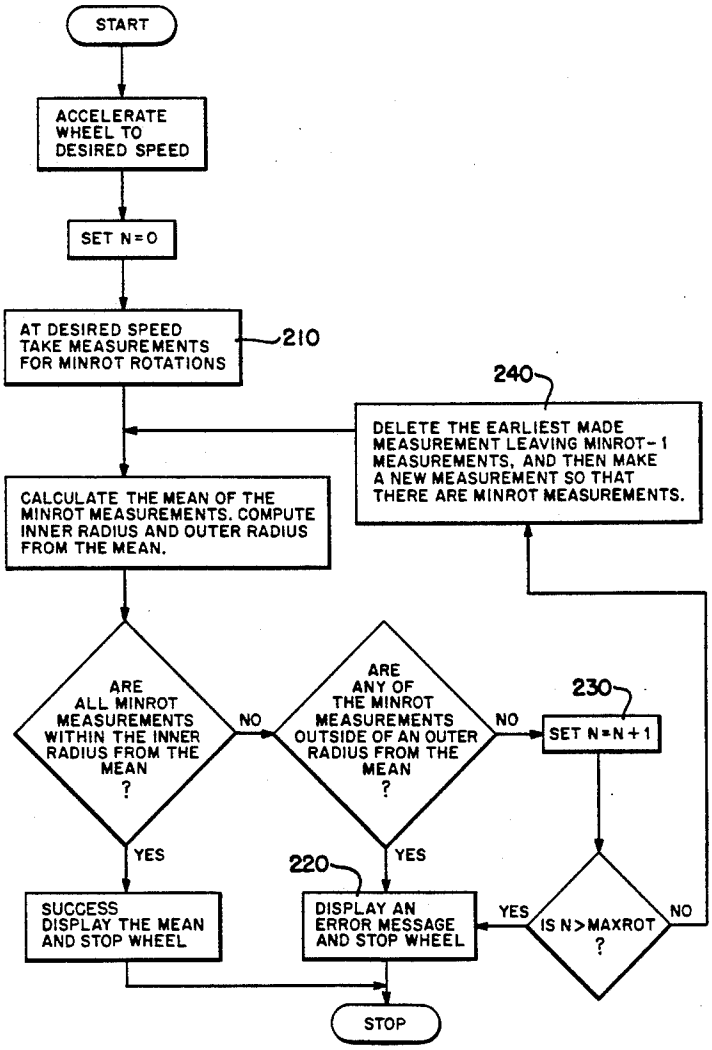

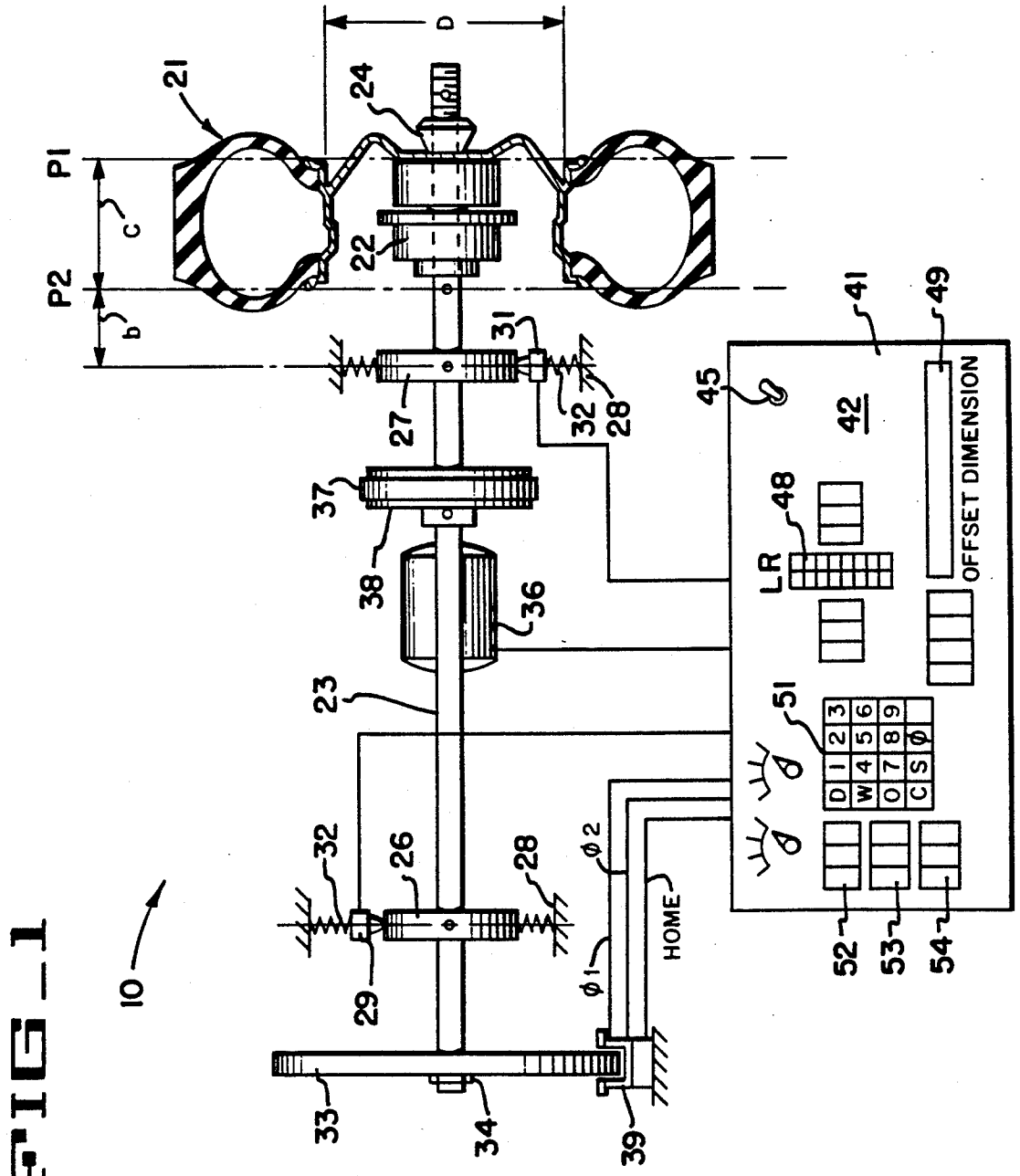
P1
P2
c
b
D
21
22
23
24
26
27
28
29
31
32
33
34
36
37
38
39
10
41
42
45
48
49
51
52
53
54
LR
OFFSET DIMENSION
HOME
ϕ1
ϕ2
D 1 2 3
W 4 5 6
O 7 8 9
C S ϕ

FIG_1

FIG_2

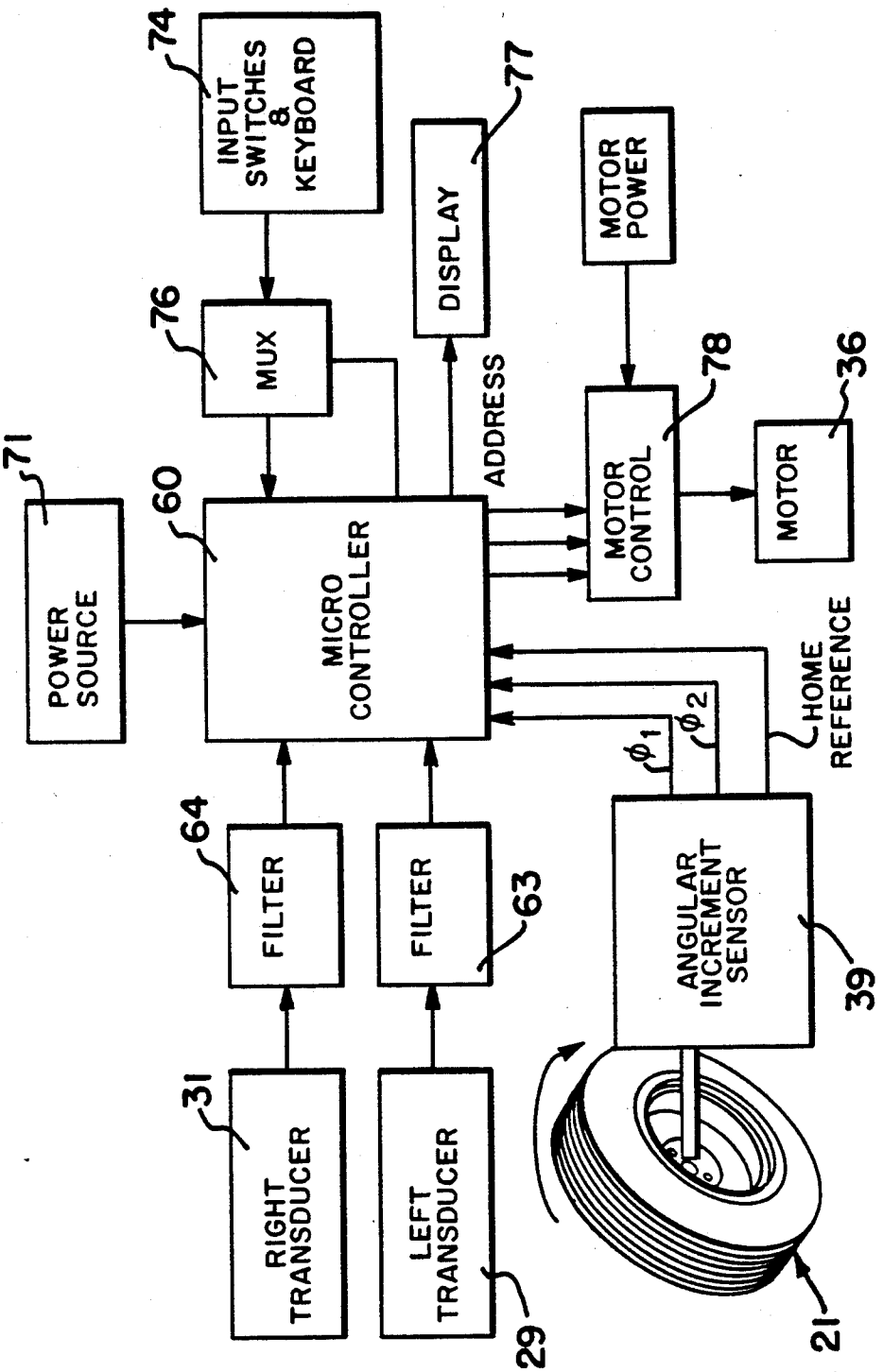
74
INPUT SWITCHES & KEYBOARD
77
DISPLAY
MOTOR POWER
76
MUX
ADDRESS
78
MOTOR CONTROL
36
MOTOR
71
POWER SOURCE
60
MICRO CONTROLLER
HOME REFERENCE
ϕ_1
ϕ_2
64
FILTER
FILTER
63
ANGULAR INCREMENT SENSOR
39
31
RIGHT TRANSDUCER
LEFT TRANSDUCER
29
21

FIG_3

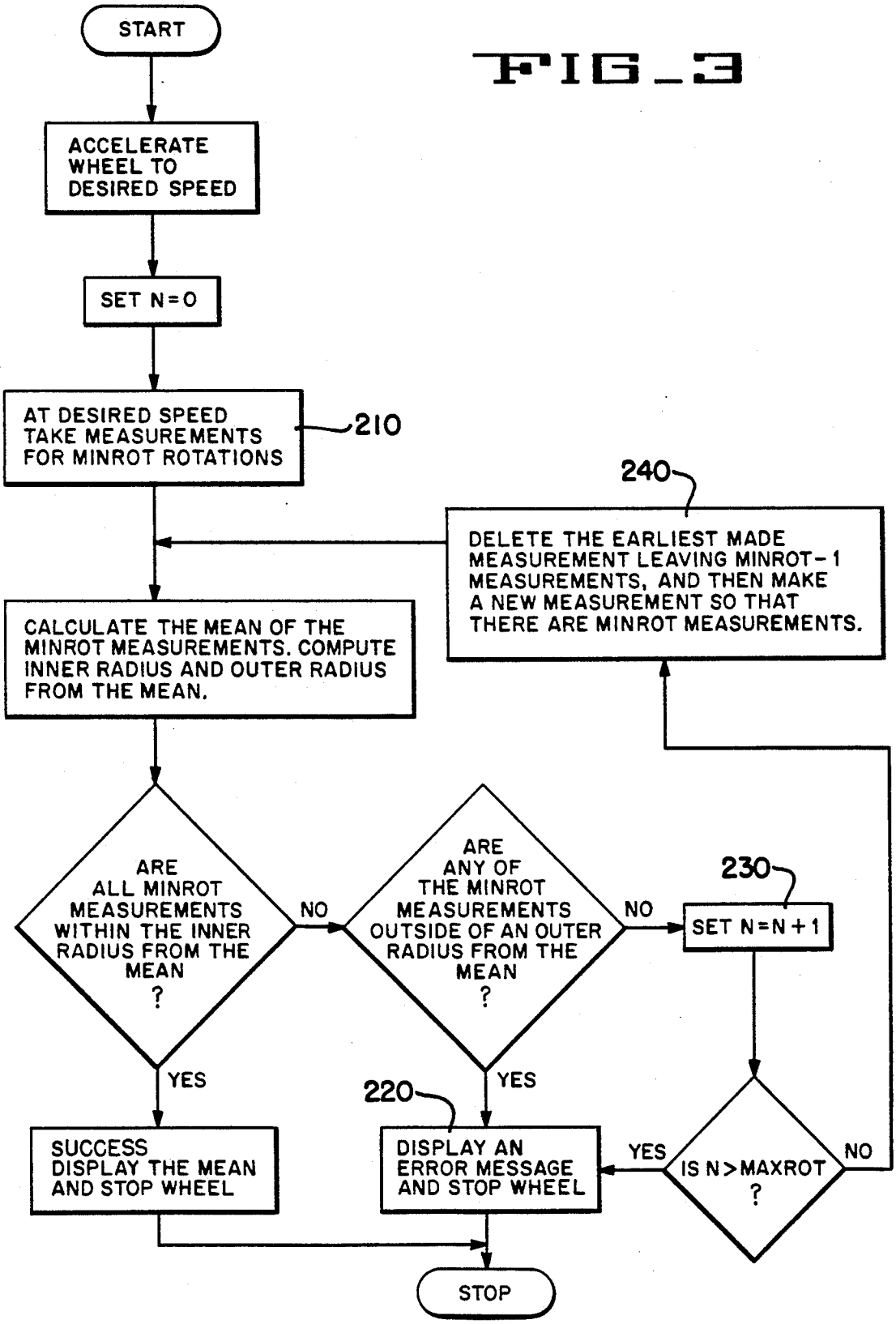
START
ACCELERATE WHEEL TO DESIRED SPEED
SET N=0
AT DESIRED SPEED TAKE MEASUREMENTS FOR MINROT ROTATIONS
210
240
DELETE THE EARLIEST MADE MEASUREMENT LEAVING MINROT-1 MEASUREMENTS, AND THEN MAKE A NEW MEASUREMENT SO THAT THERE ARE MINROT MEASUREMENTS.
CALCULATE THE MEAN OF THE MINROT MEASUREMENTS. COMPUTE INNER RADIUS AND OUTER RADIUS FROM THE MEAN.
ARE ALL MINROT MEASUREMENTS WITHIN THE INNER RADIUS FROM THE MEAN ?
NO
ARE ANY OF THE MINROT MEASUREMENTS OUTSIDE OF AN OUTER RADIUS FROM THE MEAN ?
NO
230
SET N=N+1
YES
YES
220
SUCCESS DISPLAY THE MEAN AND STOP WHEEL
DISPLAY AN ERROR MESSAGE AND STOP WHEEL
YES
IS N>MAXROT ?
NO
STOP

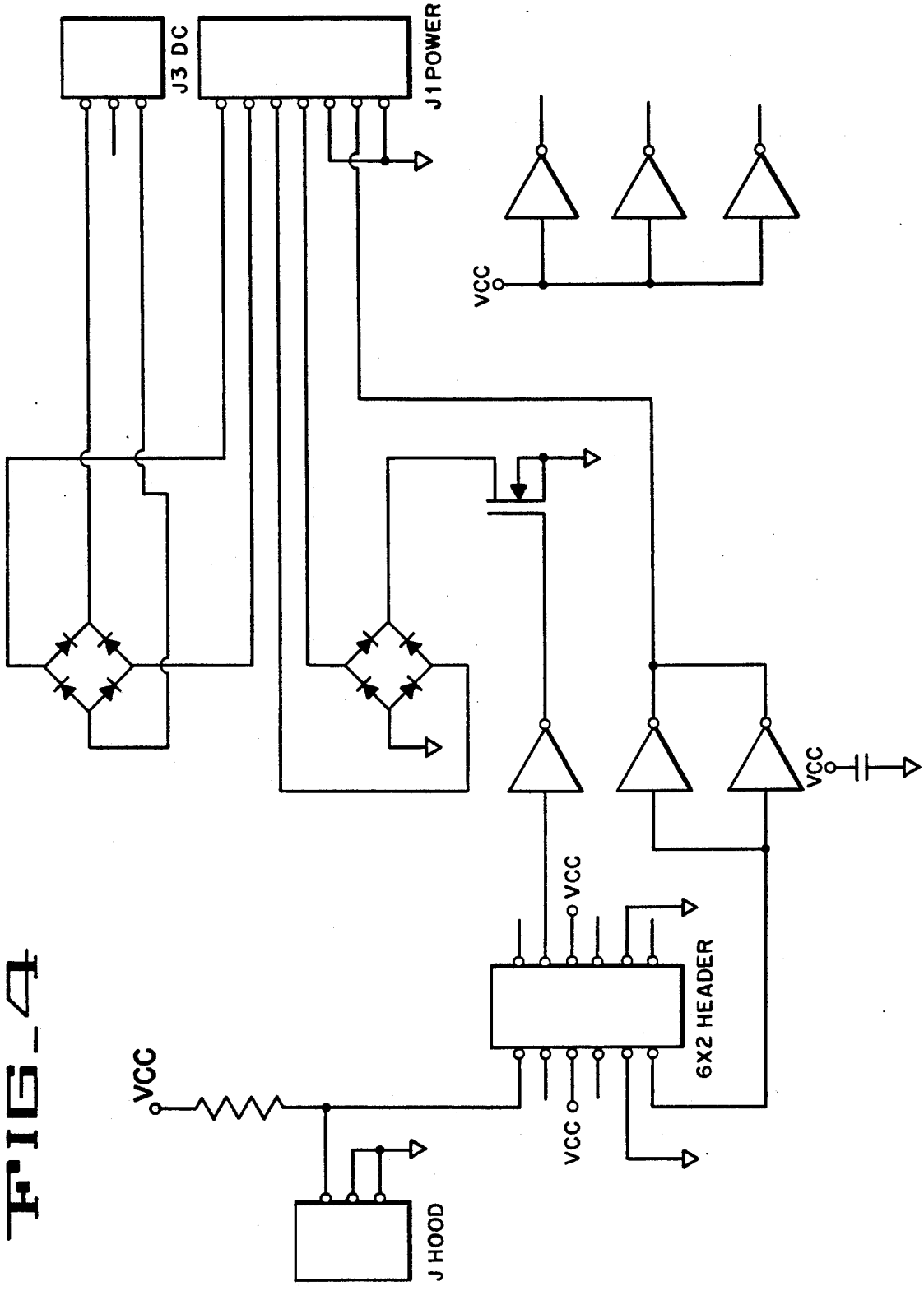

FIG_4

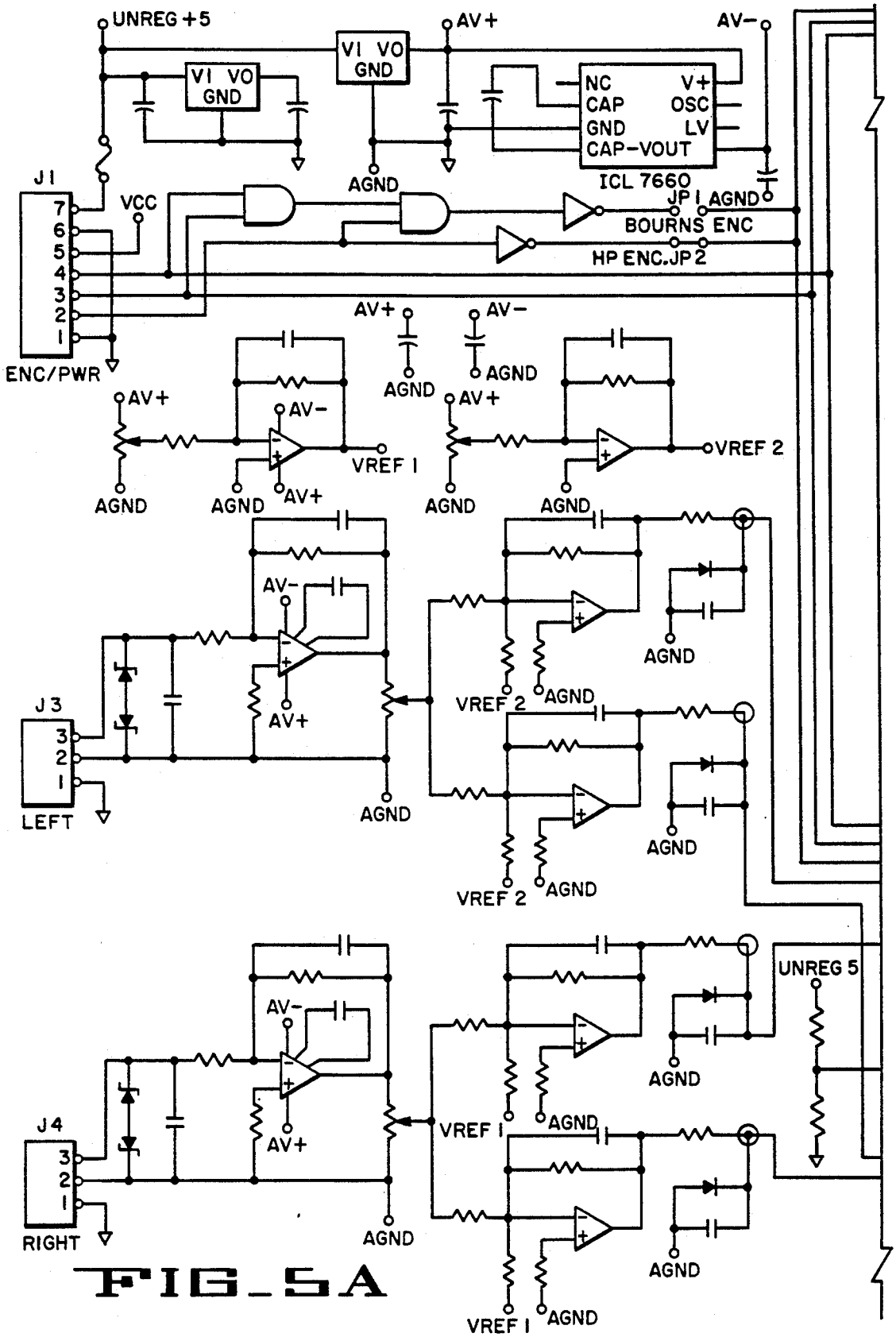
UNREG +5
VI VO GND
VI VO GND
AV+
AV-
NC
CAP
GND
CAP-VOUT
V+
OSC
LV
ICL 7660
AGND
J1
7
6
5
4
3
2
1
VCC
JP1 AGND
BOURNS ENC
HP ENC.JP2
ENC/PWR
AV+
AV-
AGND
VREF 1
VREF 2
J3
LEFT
J4
RIGHT
UNREG 5

FIG_5A

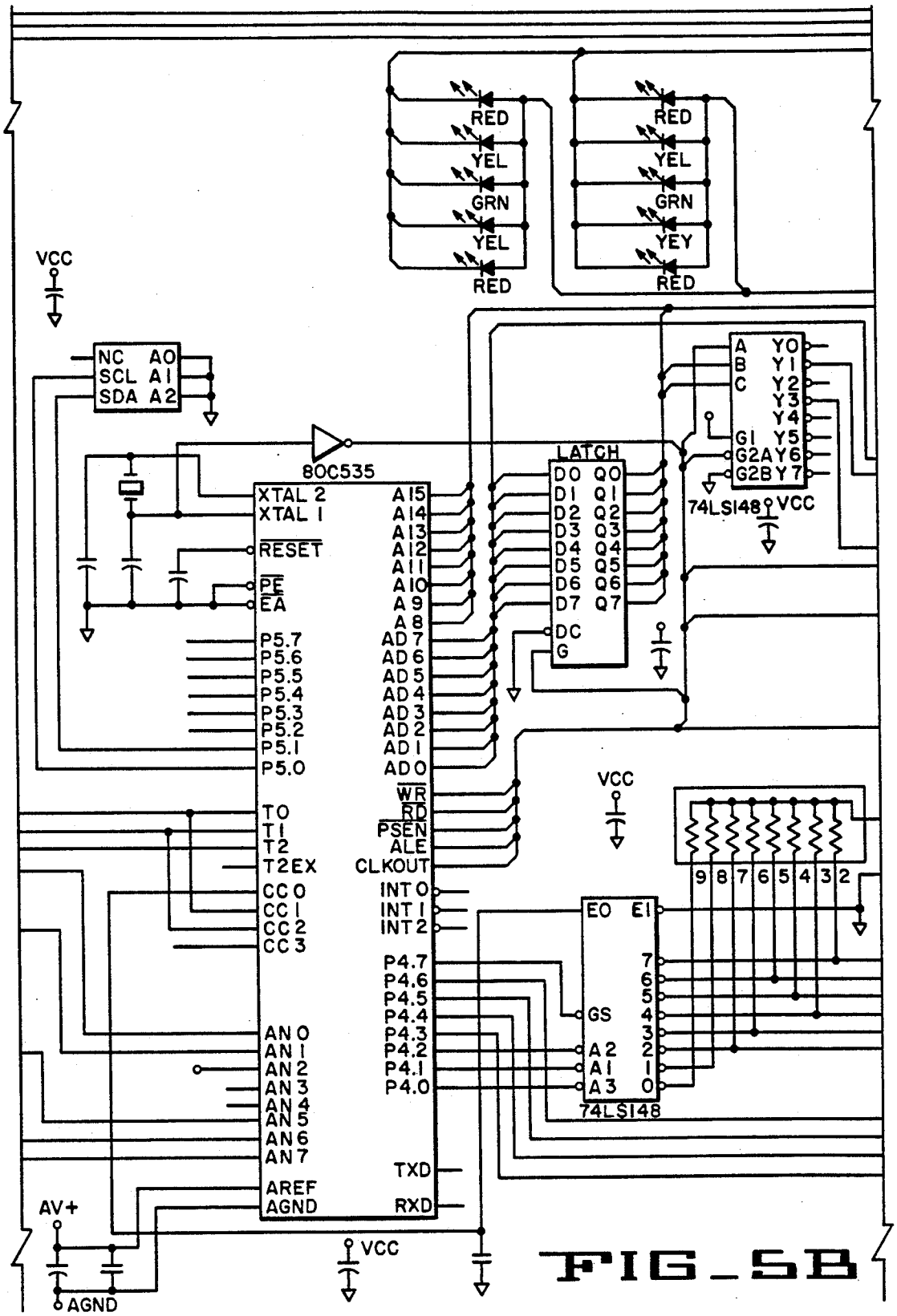
RED
YEL
GRN
YEL
RED
RED
YEL
GRN
YEY
RED
VCC
NC
SCL
SDA
A0
A1
A2
80C535
XTAL 2
XTAL 1
RESET
PE
EA
P5.7
P5.6
P5.5
P5.4
P5.3
P5.2
P5.1
P5.0
T0
T1
T2
T2EX
CC0
CC1
CC2
CC3
AN0
AN1
AN2
AN3
AN4
AN5
AN6
AN7
AREF
AGND
AV+
AGND
A15
A14
A13
A12
A11
A10
A9
A8
AD7
AD6
AD5
AD4
AD3
AD2
AD1
AD0
WR
RD
PSEN
ALE
CLKOUT
INT0
INT1
INT2
P4.7
P4.6
P4.5
P4.4
P4.3
P4.2
P4.1
P4.0
TXD
RXD
VCC
LATCH
D0 Q0
D1 Q1
D2 Q2
D3 Q3
D4 Q4
D5 Q5
D6 Q6
D7 Q7
DC
G
A Y0
B Y1
C Y2
Y3
Y4
G1 Y5
G2A Y6
G2B Y7
74LS148
VCC
VCC
9 8 7 6 5 4 3 2
EO EI
7
6
5
GS 4
3
A2 2
A1 1
A3 0
74LS148

FIG_5B

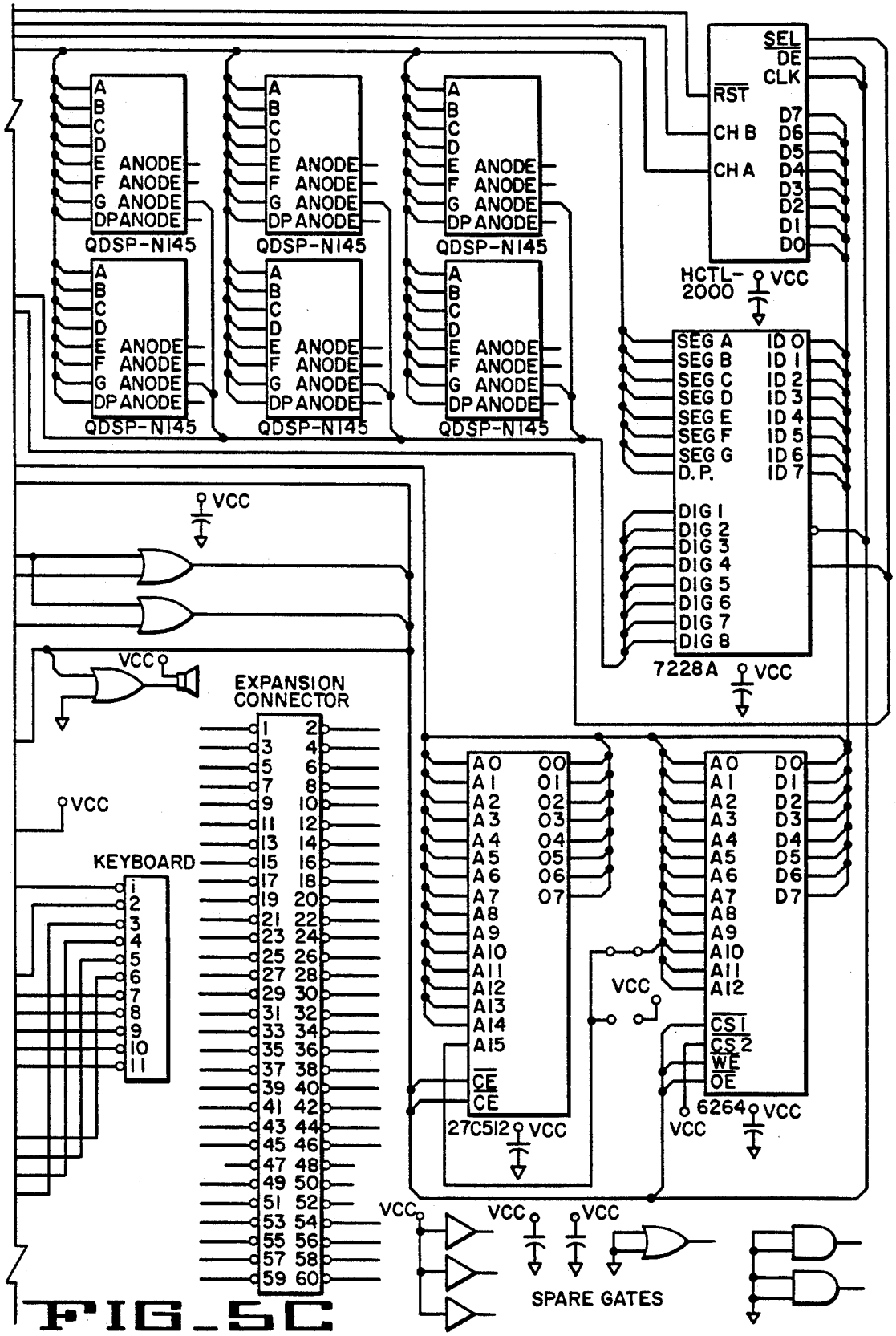
QDSP-N145
HCTL-2000
7228A
27C512
6264
VCC
EXPANSION CONNECTOR
KEYBOARD
SPARE GATES

FIG_5C

FIG_6

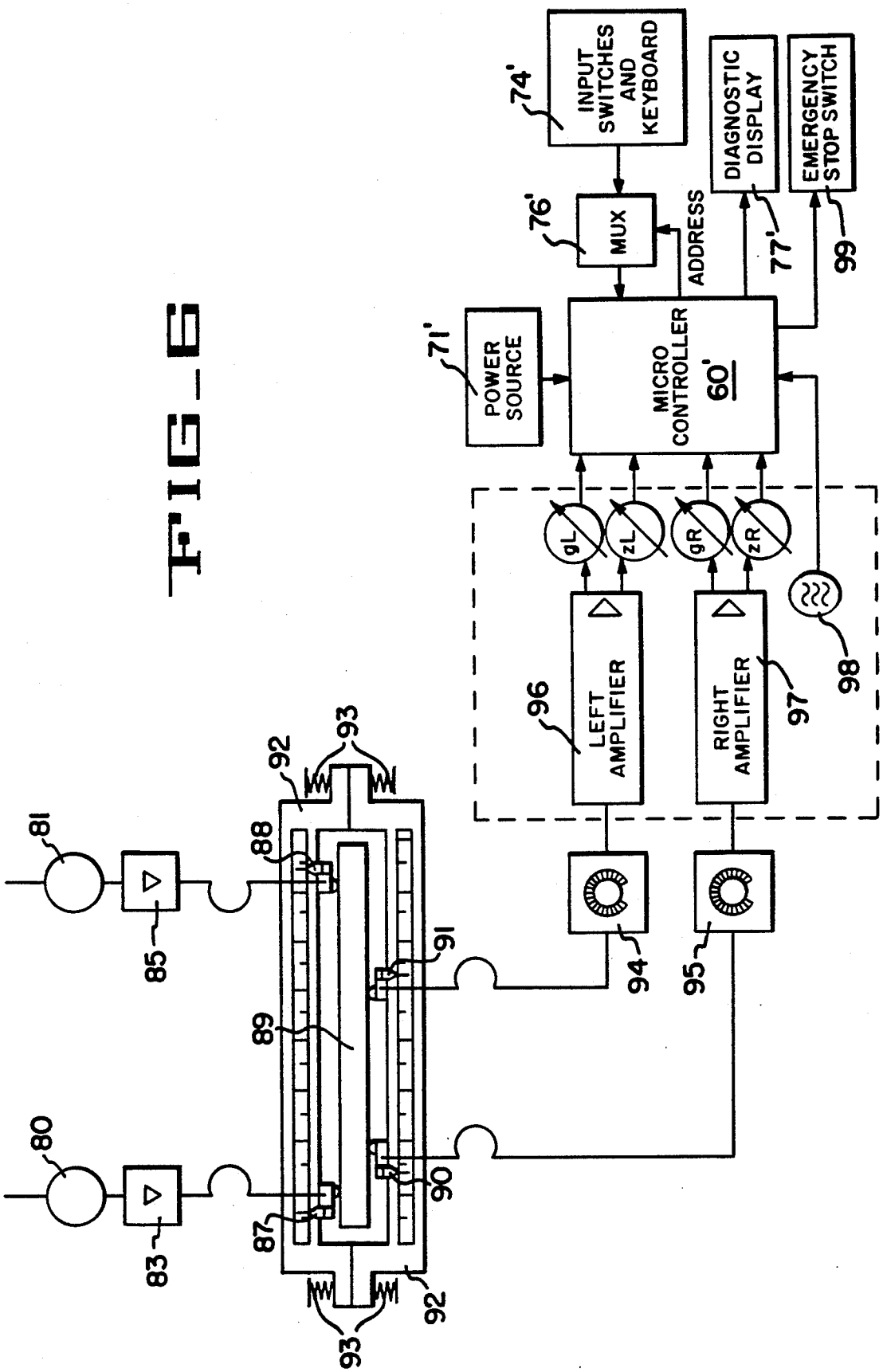
INPUT SWITCHES AND KEYBOARD
74'
DIAGNOSTIC DISPLAY
EMERGENCY STOP SWITCH
MUX
76'
ADDRESS
77'
99
POWER SOURCE
71'
MICRO CONTROLLER 60'
gL
zL
gR
zR
LEFT AMPLIFIER
96
RIGHT AMPLIFIER
97
98
81
85
88
92
93
91
89
94
95
80
83
87
90

SELF DIAGNOSTIC WHEEL BALANCER

BACKGROUND OF THE INVENTION

Wheel balancers use a display to indicate to an operator the position and amount of counterbalancing weights. These readings are typically displayed on a set of indicators or gauges. Early balancers indicated the readings continuously while the wheel was spinning. A skilled mechanic can read a continuous display of this type and not only determine the unbalance but also diagnose certain types of problems, such as: loose wheel, water inside the tire, bearing or machine fault, etc. The disadvantage of a continuous display is that novice (unskilled) users sometimes find it difficult to read and are confused by normal fluctuations. To avoid these problems, virtually all modern computerized balancers use a "sample-and-hold" technique that stabilizes the display. The drawback is that a stable display precludes problem detection and diagnosis.

It is an object of the invention to provide a balancer which automatically detects any deviation from its own optimum performance and in addition detects dynamic instabilities in the wheel.

Another object of the invention is to provide a wheel balancer which provides an accurate measurement with a minimal number of wheel rotations.

SUMMARY OF THE INVENTION

The invention provides a method and apparatus for taking measurements from a small number of rotations of the wheel to be balanced, determining a combined output measurement, determining if the variation of the measurements lie within a predetermined limit, taking additional sample points if the variation of the measurements do not lie within a second limit until the variation of the measurements lie within the limit, determining a combined output measurement, and stopping the operation whenever the variation in measurements exceeds a second limit.

BRIEF DESCRIPTION OF THE DRAWINGS

FIG. **1** illustrates a sectional view of a hard mount wheel balancer which utilizes the invention.

FIG. **2** is a schematic illustration of the electrical system of the invention used in the embodiment illustrated in FIG. **1**.

FIG. **3** illustrates a flow diagram of the procedure used in the embodiment of the invention illustrated in FIGS. **1** and **2**.

FIG. **4** is a schematic diagram of part of an electrical system which can be used in the apparatus illustrated in FIGS. **1** and **2** to carry out the procedure illustrated in FIG. **3**.

FIGS. **5**A, B and C when placed next to each other form a schematic diagram of part of an electrical system which can be used in the apparatus illustrated in FIGS. **1** and **2** to carry out the procedure illustrated in FIG. **3**.

FIG. **6** is a schematic illustration of the electrical system of the invention used on another embodiment of the invention.

DESCRIPTION OF THE PREFERRED EMBODIMENTS

One embodiment of the invention is used on a hard mount wheel balancer **10** illustrated in FIG. **1**.

As shown in FIG. **1**, an automobile rim and tire combination (wheel assembly) **21** is shown as the rotating body securely mounted against a shoulder member **22** which is attached to the end of a rotating shaft **23**. The rim portion of the wheel assembly **21** has the usual centrally disposed hole which fits over the end of the shaft **23**. The rim is held tightly in place by a wheel clamp **24** which engages threads formed on the end of the shaft **23**. A pair of bearing housings **26** and **27** are resiliently supported within a fixed, rigid framework **28**. The shaft **23** is supported on inner bearing members within the bearing housings **26** and **27**, thereby being disposed for rotational motion within the framework **28**. Left and right force transducers **29** and **31**, respectively, are positioned between the framework **28** and bearing housings **26** and **27**. Resilient springs **32** are positioned between each of the force transducers and the framework to maintain the force transducers **29** and **31** in continuous contact with the bearing housings **26** and **27**.

An encoder disc **33** is secured to the end of the shaft **23** opposite the end carrying the rim and tire combination **21** by means of a nut **34** and therefore rotates with the shaft **23**. A motor **36** is mounted on the framework **28** functioning to drive the shaft **23** rotationally through a belt **37** and a pulley **38** which is fixedly mounted on the shaft **23**. The pulley **38** can be mounted at various places such as between the bearing housings **26** and **27** as shown or between a bearing housing **26** and the encoder disc **33**.

A photosensor and light source assembly **39** is mounted on the framework **28** adjacent to the edge of the encoder disc **33**. Signals provided by the photosensor and light source assembly **39** are connected to the circuitry contained within a console **41** having a front panel **42** thereon. The signals provided by the photosensor and light source assembly are three in number, with the signals being labeled in FIG. **1** as f**1**, f**2**, and "home" or reference. Force transducers **29** and **31** are also connected to the electronic circuitry contained in the console **41** as is the motor **36**. The mechanical arrangement of the wheel unbalance measuring device as disclosed herein to this point may be of the type described in U.S. Pat. No. 4,046,017 issued to Hill.

On display panel **42** is a start/spin switch **45** which initiates a shaft spin routine. Left and right position indicators **48** provide angular information indicative of where weights should be attached at the rim of the wheel assembly **21** to counterbalance the measured unbalance mass. An offset dimension measurement gauge **49** is provided on the front panel **42** from which a convenient reading of the axial position of the wheel assembly **21** on the shaft **23** can be obtained. Wheel assembly **21** physical parameters are entered into the system by means of a four-by-four keyboard **51**. The offset dimension is entered by selecting the "O" in the first column, third row on the keyboard and the appropriate offset measurement by means of the numbered keys. The offset is represented in FIG. **1** by the letter "b". In like manner the diameter D of the rim in the rim and tire assembly **21** is entered into the system by selecting the key shown as "D" and the appropriate diameter dimension on the numbered keys. The width of the rim and tire assembly **21** is taken between the two planes, seen as P**1** and P**2** in FIG. **1**, at which counter balancing weights may be applied to the rims. Wheel width is represented in the diagram by the letter "c". The width is entered into the system by selecting the key marked "W" on the keyboard **51** together with the appropriate numbered keys. The selected diameter, width, and off-

set values are displayed in the three place displays **52**, **53**, and **54**, respectively. The panel **42** also has an error display **55** for an error message.

FIG. **2** illustrates a schematic diagram of the electrical system of the embodiment of the invention illustrated in FIG. **1**. Signals from the right transducer **31** are fed as input to a first filter **64** which feeds as output a signal to a micro-controller **60**. Signals from the left transducer **29** are fed as input to a second filter **63**, which feeds as output a signal to the micro-controller **60**. The micro-controller **60** is powered by a power source **71**. The input switches and keyboard **74** are electrically connected to a multiplexer **76** which provides input to the micro-controller **60**. The micro-controller **60** provides feedback to the multiplexer **76**. The micro-controller **60** provides control signals to the display **77** and the motor control **78**, which controls the motor **36**.

FIG. **3** is a schematic illustration of the operation of the embodiment of the invention illustrated in FIGS. **1** and **2**. As described above the keyboard **74** is used to input the offset, the wheel width, and the wheel diameter into the micro-controller **60** and to tell the micro-controller **60** to start the motor **36**. The motor **36** begins to rotate the wheel assembly **21** until the wheel assembly **21** reaches a desired rotational speed **210**. The angular increment sensor **39** sends information regarding the angle of the wheel assembly **21** to the micro-controller **60**, which determines the time it takes for the wheel assembly **21** to make a complete rotation T_T. Using the time it takes for the wheel assembly **21** to make a complete rotation T_T, the micro-controller **60** calculates the instantaneous angular velocity w_T using the equation $w_T = 1/T_T$. The voltage Vr produced by the right transducer **31** is fed through the first filter **64** to the micro-controller **60**. The voltage Vl produced by the left transducer **29** is fed through the second filter **63** to the micro-controller **60**. The force on the left transducer Fl=(Kl)(Vl), where Kl is a constant, characteristic of the left transducer **29**. The voltage Vr produced by the right transducer **31** is fed through the first filter **64** to the micro-controller **60**. The force on the right transducer Fr=(Kr)(Vr), where Kr is a constant, characteristic of the right transducer **31**. From these values for each rotation a left weight vector Wl and a right weight vector Wr are calculated using the equations:

$$Wl = 2(Fl)g/(w_T^2 D) \text{ and } Wr = 2(Fr)g/(w_T^2 D),$$

where g is the gravitational constant.

Two values MINROT and MAXROT are set in the system. In this embodiment MINROT=5 and MAXROT=30. N is set initially to zero. After the wheel assembly **21** reaches a desired rotational speed Wl and Wr are collected for five rotations, creating a seed set of five pairs of Wl and Wr. In this embodiment, averaging is used to calculate the mean. The Wl's are averaged together to get Wl_{ave}, and the Wr's are averaged together to get Wr_{ave}. INNER RADIUS and OUTER RADIUS are set in proportion to the magnitude of Wl_{ave} and Wr_{ave}. For each pair of the five data a distance is calculated using the equation:

$$D = [(Wl_{ave} - Wl)^2 + (Wr_{ave} - Wr)^2]^{\frac{1}{2}} ,$$

If the distance D for all pairs of data is less than the INNER RADIUS, Wl_{ave} and Wr_{ave} are used as imbalance values and the information to balance the wheel assembly is displayed and the rotation of the wheel assembly **21** is stopped by using the motor as a brake. If a distance D for any of the pairs of data is greater than the OUTER RADIUS, then the rotation of the wheel assembly **21** is stopped and an error message is displayed **220**. If none of the distances D for all of the pairs of data are greater than the OUTER RADIUS and at least one of the distances D of a pair of data is greater than the INNER RADIUS, then N is set to N+1 **230** and if N is less than or equal to MAXROT the earliest made pair of data is deleted and a new pair of data is measured, then the procedure is repeated beginning from the step of calculating Wl_{ave} and Wr_{ave}. If N>MAXROT than an error message is displayed and the rotation of the wheel assembly is stopped using the motor as a brake **220**.

The invention provides a means to determine if errors are being introduced by bearing wear, or fluids in the tire, or improper mounting of the wheel assembly. Such greater would cause pairs of data with distances consistently greater than the inner radius or in drastic cases greater than the outer radius. The constant determination of such errors will stop the rotation of the wheel assembly and signal to the operator that a problem exists, which is causing inaccurate measurements. For temporary errors such as a person or tool accidentally bumping the apparatus, the invention determines that a data pair is in error and selects a new data pair. If the error is temporary such as the bumping of the apparatus, then the elimination of the data in error and the addition of new data will allow the invention to provide an accurate measurement in such conditions.

FIG. **4** is a schematic diagram of a part of an electrical system. FIGS. **5**A,B,C when placed next to each other form a schematic diagram of part of an electrical system. Together FIGS. **4** and **5**A,B,C form an electrical system which may be used to implement the procedure in FIG. **3** on a wheel balancer as shown in FIGS. **1** and **2**.

In alternative embodiments of the invention, the bearing housings **26** and **27** may use an elastomeric seal on an inner rotating ring to provide protection to the bearing. In the alternative, the elastomeric seal can be replaced with a metallic non-contacting shield which reduces drag caused by the seal, but also reduces bearing protection. In addition an embodiment of the invention may provide a retained bearing to hold the shaft in place and a "floating" bearing allowing an easier alignment of the bearing races. The floating bearing is accomplished by honing the support for the floating bearing in a bearing tube and lubricating this region. The invention may be used in an all electronic wheel balancer with rotational wheel speeds up to 700 rpm.

The above described embodiment uses the invention on a hard mount wheel balancer. Other embodiments of the invention could be used on a soft mount wheel balancer. While the above described embodiment uses data pairs from five rotations, data pair from any number of rotations greater than two could be used. Other statistical measures may also be used, such as the standard deviation of a series of data pairs.

FIG. **6** illustrates an electrical schematic of the invention used on a balancer described in U.S. Pat. No. 3,902,373 to Wolf-Dieter Reutlinger incorporated by reference. The balancer utilized is illustrated in FIG. **3** of U.S. Pat. No. 3,902,373, with modifications. As described in U.S. Pat. No. 3,902,373 diaphragms **80** and **81** are made integral with bearing stands. The output signals from the two force-measuring diaphragms **80** and **81** are amplified in amplifiers **83** and **85** and led through

reversible alternator force exciters **87** and **88** to develop alternating forces on a beam **89**. The beam **89** is supported by or on force-measuring diaphragms or sensors **90** and **91**. The beam **89** as well as the exciters **87** and **88** and diaphragms **90** and **91** are included in a framing **92** held by elastic means. This framing **92** is made up of two parts for the purpose of easily adjusting or setting the alternating force producer and force measuring means. The two parts are urged together by means of tensioning springs **93**. The output electrical signals from the force measuring diaphragms **90** and **91** are led to radius controls **94** and **95** at which the radius on the rotor for attachment of weights for the balancing out is set. The signals from the radius controllers **94** and **95** are fed to a left amplifier **96**, which generates signals gL and zL, and a right amplifier **97**, which generates signals gR and zR. These signals and a signal created by a phase generator **98** are fed into an electrical system similar to the electrical system in FIG. **2**. Similar components between the electrical systems in FIG. **2** and FIG. **3** will be similarly numbered. The signals are fed to a micro-controller **60'**. The micro-controller **60'** is powered by a power source **71'** and receives input from and provides output to a multiplexer **76'** which also receives input from input switches and a keyboard **74'**. The micro-controller **60'** provides output to a diagnostic display **77'** and an emergency stop switch **99**. The micro-controller **60'** processes the signals in a similar manner as described in the previous embodiment.

While preferred embodiments of the present invention have been shown and described herein, it will be appreciated that various changes and modifications may be made therein without departing from the spirit of the invention as defined by the scope of the appended claims.

What is claimed is:

1. A self diagnostic wheel balancer for use in balancing a wheel, comprising:

means for rotating the wheel;

means for collecting a set of imbalance measurements with the set comprising at least one imbalance measurement per rotation in a set of at least two rotations;

means for continuously eliminating a value in the set of imbalance measurements and adding a new imbalance measurement to the set of imbalance measurements until any one of the following events is accomplished: the set of imbalance measurements are sufficiently consistent, the set of imbalance measurements are sufficiently inconsistent, and an upper limit of imbalance measurements is reached; and

means for displaying a number derived from the set of imbalance measurements indicating how to balance the wheel.

2. The self diagnostic wheel balancer, as claimed in claim **1**, wherein the means for continuously eliminating a value in the set of imbalance measurements, comprises:

means for computing the mean value of the set of imbalance measurements; and

means for determining if any of the imbalance measurements are outside of a first distance from the mean of the set of imbalance measurements.

3. The self diagnostic wheel balancer, as claimed in claim **2**, further comprising:

means for determining if any of the imbalance measurements are outside of a second distance, which is greater than the first distance from the mean of the set of imbalance measurements; and

means for displaying an error signal if any of the imbalance measurements is outside the second distance from the means of the set imbalance measurements.

4. The self diagnostic wheel balancer, as claimed in claim **3**, further comprising:

means for counting the total number of imbalance measurements taken; and

means for displaying an error signal if the total number of imbalance measurements is greater than a set value.

5. The self diagnostic wheel balancer, as claimed in claim **4**, wherein the means for computing the mean value of the set of imbalance measurements comprises, means for averaging the set of imbalance measurements.

6. The self diagnostic wheel balancer, as claimed in claim **4**, further comprising, means for stopping the rotating wheel when an error signal is displayed.

7. The self diagnostic wheel balancer, as claimed in claim **1**, wherein the means for continuously eliminating a value in the set of imbalance measurements and adding a new imbalance measurement to the set of imbalance measurements, comprises:

means for removing the earliest measured value from the set of imbalance measurements;

means for adding a new imbalance measurement to the set of imbalance measurements; and

means for determining whether the set of imbalance measurements is consistent.

8. The self diagnostic wheel balancer, as claimed in claim **1**, further comprising:

means for counting the total number of imbalance measurements taken; and

means for displaying an error signal if the total number of imbalance measurements is greater than a set value.

9. The self diagnostic wheel balancer, as claimed in claim **8**, wherein the means for continuously eliminating a value in the set of imbalance measurements and adding a new imbalance measurement to the set of imbalance measurements, further comprises:

means for eliminating the earliest measured value from the set of imbalance measurements;

means for adding a new imbalance measurement to the set of imbalance measurements; and

means for determining whether the set of imbalance measurements is consistent.

10. A method of providing a self diagnostic wheel balancer for use in balancing a wheel, comprising the steps of:

rotating the wheel to a desired speed;

collecting a set of imbalance measurements wherein the set of imbalance measurements comprises at least one imbalance measurement per rotation in a set of at least two rotations;

continuously eliminating an imbalance measurement from the set of imbalance measurements and adding a new imbalance measurement to the set of imbalance measurements until any of the following events is accomplished: the entire set of imbalance measurements is within a set distance from each other, and until an upper limit of imbalance measurements is reached; and

displaying a number derived from the set of imbalance measurements indicating how to correct the imbalance of the wheel.

11. The method, as claimed in claim 10, wherein the step of continuously eliminating an imbalance measurements, comprises the steps of:

computing the mean value of the set of imbalance measurements; and

determining whether any of the imbalance measurements are outside of a first distance from the mean of the set of imbalance measurements.

12. The method, as claimed in claim 11, further comprising the steps of:

determining if any of the imbalance measurements are more than a second distance from the mean; and

displaying an error signal if any of the imbalance measurements are more than a second distance from the mean.

13. The method, as claimed in claim 12, further comprising the steps of:

counting the total number of imbalance measurements taken; and

displaying an error signal if the total number of imbalance measurements taken is greater than a set value.

14. The method, as claimed in claim 13, wherein the step of computing the mean value of the set of imbalance measurements comprises the step of averaging the set of measurements.

15. The method, as claimed in claim 10, wherein the step of continuously eliminating an imbalance measurement, comprises the steps of:

removing the earliest imbalance measurement from the set of imbalance measurements;

adding a new imbalance measurement to the set of imbalance measurements; and

determining whether the set of imbalance measurements is consistent.

16. The method, as claimed in claim 15, further comprising the step of stopping the rotating wheel when an error signal is displayed.

17. The method, as claimed in claim 10, further comprising the steps of:

counting the total number of imbalance measurements taken; and

displaying an error signal if the total number of imbalance measurements taken is greater than a set value.

18. The method, as claimed in claim 17, wherein the step of continuously eliminating an imbalance measurement, further comprises the steps of:

removing the earliest imbalance measurement from the set of imbalance measurements;

adding a new imbalance measurement to the set of imbalance measurements; and

determining whether the set of imbalance measurements is consistent.

* * * * *